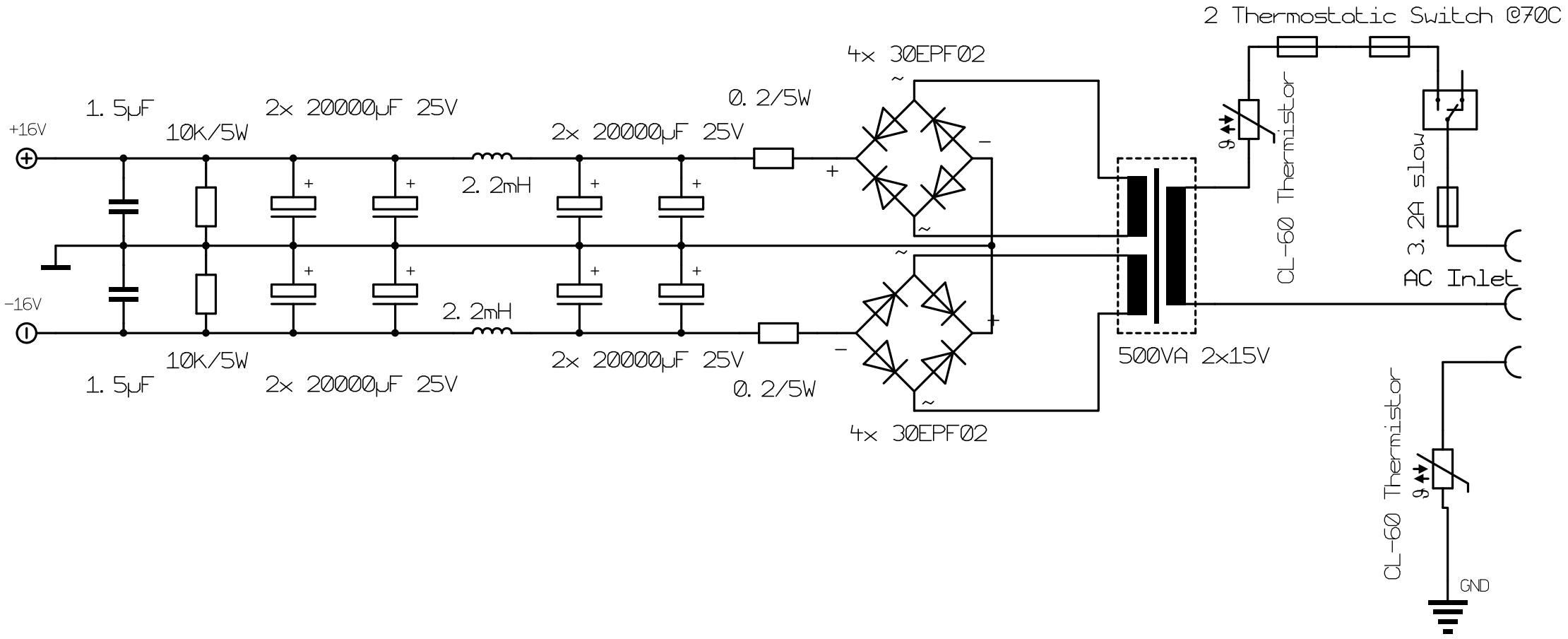
2 Thermostatic Switch @70C
4x 30EPF02
0.2/5W
1.5µF
2x 20000µF 25V
10K/5W
+16V
2x 20000µF 25V
2.2mH
CL-60 Thermistor
3.2A slow
AC Inlet
-16V
2.2mH
10K/5W
2x 20000µF 25V
500VA 2x15V
1.5µF
2x 20000µF 25V
0.2/5W
4x 30EPF02
CL-60 Thermistor
GND